the aerial eye

a quarterly publication of the aerial photography committee
of the American Kitefliers Association
volume 1 / number 1 / fall 1994

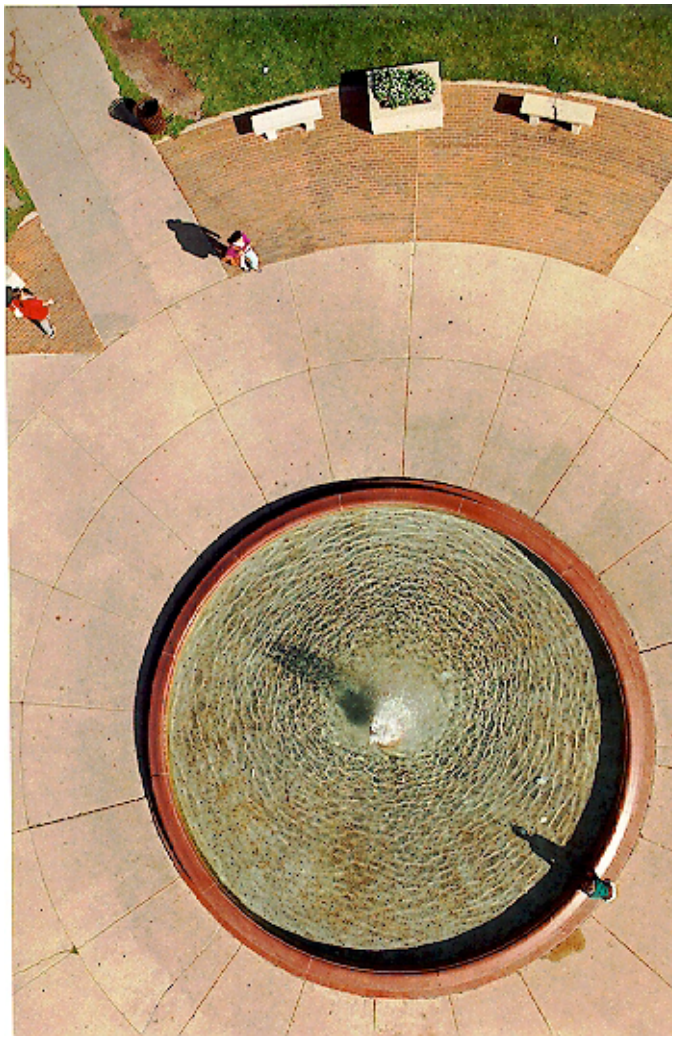

photo by
Craig Wilson

CAMERA CRADLES

first flight

This quarterly newsletter is produced by the Aerial Photography Committee of the American Kitefliers Association, and will be mailed to interested AKA members in August [next year! - Ed.], November, February, and May. Although this first issue is free, after a cost evaluation we may have to charge for subsequent issues.

Since publication of the KAPWA News was suspended in December, 1993, a communications gap has existed for kite aerial photographers. The Aerial Eye and AKA's Aerial Photography Committee should help fill this gap.

Michel Dusariez, President of the KAPWA Foundation, and his Associate Geoffroy de Beauffort, have also agreed to provide input for our newsletter, which is appreciated.

As Committee Chair, I'd like to thank all those AKA members who have contributed to this first issue. Special thanks are due Brooks Leffler, whose enthusiasm and support have made this newsletter possible.

Steve Eisenhauer

the committee

Chair
Steve Eisenhauer (609) 589-2049
Newsletter Editor
Brooks Leffler (408) 647-8483
Anne Rock (510) 848-7335
Craig Wilson (608) 831-6770

submissions policy

AKA members are encouraged to submit articles, letters, comments, photos and sketches that pertain to kite aerial photography.

Text via email or on 3.5" disk in ASCII text format is easiest to convert to newsletter print, but typed text (non-proportional type preferred) or even handwritten letters are just as welcome. Likewise, diagrams in Macintosh PICT, TIFF, or EPS formats are best, but pen drawings, preferably on white paper, or just quick sketches on the back of the proverbial napkin will work too. We're most concerned with getting information and don't want to discourage contributors.

Submitting photos is trickier. We want to reproduce your pictures as accurately as we can, while using desktop techniques. We're learning to use both the hardware and the software, and technical quality should get better as we gain experience.

Photos may be sent in print form, or on Kodak PhotoCD, or on Macintosh disk in PICT, TIFF or EPS format. Slides or negatives are OK too; we will convert them to PhotoCD. We'll keep the prints, but return all disks, slides and negatives within a month.

Send everything to:

Brooks Leffler

PO Box 34

Pacific Grove, CA 93950

email: kyteman@aol.com

phone or fax: (408) 647-8483

our feature this issue:

aerial camera cradles

A cradle is the suspension system used to attach the camera to the kiteline. A good cradle is lightweight and stable in flight. Many cradles have radio/control equipment attached to trip the shutter and/or orient the camera. Other cradles avoid this additional weight by using cameras with interval shutter timers and by requiring manual orientation before each flight.

The three basic types of cradles are the fixed-mount, pendulum-swing and Picavet-style.

Greens Kites sells a fixed-mount cradle (available from Into the Wind Kites in Boulder, CO) for about $60.00. This cradle can be outfitted with R/C equipment and changed to a pendulum-swing style. For two years I used a fixed-mount Greens cradle with one R/C servo attached to trip the shutter. I now use a three-servo, pendulum-swing, pivot-dampened, double-drogue cradle, but occasionally yearn for the simplicity of my old fixed-mount cradle.

Many kite aerial photographers use pendulum-swing cradles made of aluminum, fiberglass, wood or a combination of these and other materials. Other photographers use a Picavet-style cradle that uses tiny pulleys and lengths of kiteline. Variations of the pendulum-swing and Picavet-style cradles are the most common suspension systems.

Regardless of cradle style, it's rare to see two kite aerial photographers with cradles that look the same. Alteration and originality are the guiding rules of cradle construction.

In this first issue of The Aerial Eye we'll focus on cradles used by seven AKA kite aerial photographers. Recognize that cradles are specific to each photographer: a cradle well-suited to one photographer may be ill-suited to another. A cradle designed for use with a high-angle Greens Stratoscoop Kite may not work with a low-angle Sutton Flowform. Individual flying styles, local wind conditions, weight of cameras used, and shutter speeds utilized are a few other factors that determine a cradle's suitability.

Recognize also that you can learn from cradle designs that may be less advanced than your own. The simplest lightweight cradle design may be an ideal emergency backup, a "take anywhere" suitcase-packed version, a present to your son or daughter, or a light-wind alternative. The simplest design may utilize a single advancement you overlooked, such as a better battery pack, vibration damper, shutter release or antenna. Advanced photographers can learn from the fresh outlook of beginners. That's what our newsletter is all about!

Steve Eisenhauer

kites…camera…action!

by CRAIG WILSON • 7210 Harvest Hill Rd., Madison, WI 53717

There are three main elements to successful kite aerial photography: kites, camera, and technique.

First and most important is the kite and your kiteflying skill. The kite is the engine that provides the energy to lift the camera equipment. It needs to be powerful enough to lift the weight of the camera and associated controlling equipment and it needs to be stable and reliable so that you feel comfortable and safe. I spent six years building and flying kites before I got the idea to send a camera up the line, and I credit those years of experience with the success I have had in aerial photography.

Very few great photographs will be taken at a kite field — an open area is not all that photogenic. The ability to get a kite up and then maneuver into interesting places is key to making good photographs. Having kites that you know and trust is the pivotal element that needs to be developed. Your skill level as a kiteflier is paramount.

Your first step, if you want to pursue this interest, should be to teach yourself how to fly several different types of kites, and to learn how they behave in a variety of wind, thermal, and load conditions.

CAMERA AND RIG

The second element is the camera equipment. You will need a lightweight camera, a way to attach the camera to the kite line, and a method of control that allows you to aim the camera and activate the shutter. Since there are many suitable cameras and each camera is different, your "rig", or camera holder, will need a custom design that you as a builder are comfortable with.

I suggest that you start simple, as I did, with a timer to activate the shutter, and the aiming pre-set on the ground. Use a lightweight point-and-shoot camera, such as a Ricoh Shotmaster which has a built-in interval timer. As you progress you can modify your system to accommodate better cameras and lenses and to afford more control from the ground of where your camera is looking and when the shutter will be activated.

As you improve your system you will better understand how each element affects the photographic outcome. There are so many variables — kite, amount of weight it is lifting, wind speed and direction, obstacles on the ground, the camera, film, your ability as a kiteflier and your ability as a designer and builder — that only you can develop a system that you will feel comfortable handling.

Design a system that is easy to use. If you need a helper to use your system, you will only use it one-tenth as often as you would like. With kites large enough to lift several pounds of equipment, you must always have a concern for safety. A change in the windspeed or direction can cause a serious problem if you are not expert with your kites.

DOING IT

The third element is technique.

My goal is to get my camera to unusual places, high enough for an overview, but not so high that I lose all the details. I try to work in the area above rooftops and ladders but below the realm of airplanes and helicopters to obtain unique views of the world. The kite is the tool I use to lift my camera to places not accessible by any other means. My kiteflying technique and my judgment of where the camera is looking are things that comes with practice.

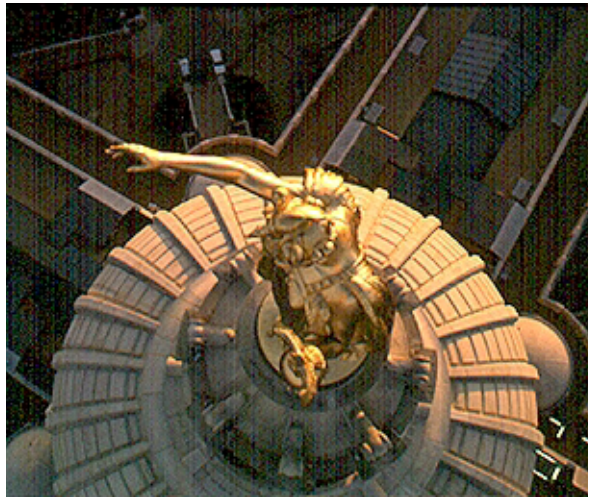

Capitol Dome— Madison, Wisconsin by Craig Wilson

I use my system at least once a week all year round. During the last twelve months I have run 74 rolls of 36-exposure film through my kite-lofted camera. No amount of complicated, high-tech, sophisticated equipment is as important as, or can replace that experience. Practice — the sheer time spend doing KAP, judging where the camera is in relation to the target, judging where the camera is looking, and studying the results with notes taken at the site — is the best tool to insure great shots each time out.

Kite Aerial Photography is really being able to judge from the ground what the camera is seeing and to imagine what the world looks like from up there so that you can compose a good image. A picture is judged on lighting, color, composition, sharpness, and by the emotions that it evokes — not by how it was taken. With the most primitive and simple camera system, or with the most complex, the key element is the skill of the operator. Your skills allow you to make the correct choices to control the system. Practice is what perfects that control.

Luck is an important factor in any type of photography but it is especially potent in KAP. By paying attention to all the details that you can control and by taking advantage of good condi-

• *continued next page*

tions, you should be ready for the good luck that follows all kitefliers and you will surely achieve success.

ACHIEVING BALANCE

In making kite aerial photographs there are many elements that need controlling or regulating. You as a builder/designer must decide how the elements are to be controlled and what degree of control you really want over the process. Through practice and experience you will find and understand where the line should be drawn between lifting the weight of control equipment and the benefits of having that control.

A balance will be found where the entire system, from the kite on the one end, to the hand and brain on the other, is in tune and working as a single extension of your creative sight. My opinion is that I want to control only what I am capable of having a positive impact on; the rest should be left to chance.

I now use a Ricoh KR10m single-lens reflex camera with a 28mm or 50mm lens and a shutter speed of 1/1000 sec, using 100 - 400 ASA (ISO) film. I lift my camera with an 18-foot delta. My rig is radio-controlled with three servo motors, so that I may control rotation, elevation angle, and the shutter release from the ground.

I have the option of a miniature video camera to show me what the camera is seeing, but I don't use it. It complicates the process. I find that I'm forced to look down at the monitor and feel like I'm not in balance with the system. It doesn't really show me anything I didn't already know. My years of experience turn out to be a more powerful tool than the video, so why duplicate parts of the system?

We all at best have only two hands and one neck to hang stuff from. By keeping the system simple and as easy to use as possible you will use it often and thereby develop the most important and powerful tool involved in controlling the process — your brain.

• æ

Henry Jebe's High Risk rig: garage sale camera, dethermalizing timer, aluminum frame, wood lever, and some hardware. (See story on opposite page.)

keeping it simple

by HENRY JEBE • PO Box 240221, Douglas, AK 99824-0221

My original reason for KAP was to obtain aerial photos of hunting areas and such. My first attempts were with an Olympus XA (35 mm), with its 12 second self-timer (no winder). The camera was hung from its strap from a snap on the kite line with no attempt to dampen camera rotation. The first roll of film produced maybe two or three "keeper" photos.

With only 12 seconds until the shutter snapped, I would send the kite up about 300 or 400 ft. and then walk the line down to within 50 feet from the kite. I would then attach the camera, set the self-timer, wait for a strong gust of wind to insure a good lofting of the camera, trip the shutter release and let it all go.

My kite was a 8 sq. ft. Sutton Flow Form. I was able to shoot photos from a fairly good altitude, mostly because the camera was very light.

It didn't take long to decide to use a pendulum to dampen camera rotation. The use of 2 timers, totaling about 25 seconds, was the other major improvement, and this system formed the basis for most of my aerial photography for a long time. With all its drawbacks, this system was able to put quite a few good photos in my collection.

I have since dabbled with radio control rigs for some time, but to date my radio rigs are still just one channel (shutter). The main problem seems to be additional weight and my reluctance to take risks with an expensive rig.

I wasted a servo once when the rig went down in salt water while attempting a photo of my canoe. The camera was a Canon underwater camera and was not damaged. The receiver and batteries were in balloons for safety — lucky for me.

With assistance from Michel Dusariez from KAPWA and others, I made a rotational rig started by a dethermalizing timer tripping a microswitch. This rig uses a Ricoh Shotmaster with the electric shutter tripped by another microswitch at selected positions of rotation. A winch opens the first microswitch which stops the rig's rotation after about a turn. This rig can be set up for either vertical or horizontal format photos, though I tend to favor vertical format because I like the horizon and the ability to look nearly straight down in the same photo.

With all this fancy stuff I still use a simple and really cheap rig for a lot of my most risky photography. This consists of a simple aluminum cradle (see pic) attached to a pendulum with vertical and horizontal axis adjustment, and a dethermalizing timer. This setup allows me to shoot photos from floats, boats, the ship that I work on and other places where I can only pay out or haul in line, so I have plenty of

• *continued on next page*

the maryland W.R.A.P. challenge

The Maryland Kite Society has issued the Wide Range Airborne Platform challenge to be competed at the Wildwood convention Oct 12 - 15: Build the best possible single kite for aerial photography. Here's a summary of the groundrules:

- One kite (no trains) must lift a weight of 2.25 lb in a variety of winds (1 to 25 mph is suggested.)
- One person only must launch, fly, and retrieve the kite & payload, and do so with enough care and stability not to endanger the payload.
- Kite must have same configuration for all wind speeds; no alterations permitted.
- Fliers may provide a payload with no dimension greater than 12 in.; judges may choose to supply an alternative standard load.
- If the kitemaker is not registered for convention, kite may be flown by another registered attendee. Both must be current members of AKA.

Winning kite will best achieve:

- at least 5 min. minimum flight time at minimum altitude of 100 ft
- most stable flight at decent angle
- widest windspeed range
- maximum payload safety.

Questions? Contact Bevan Brown at (301) 890-1178.

• æ

simple • continued *from page 7*

time (nearly 6 minutes) before the picture is taken.

The camera I am using on this rig is a Ricoh AF-5 which cost me $8.00 at a garage sale. (I have a couple of similar cameras also bought at garage sales if I should lose or have one destroyed by fate's fickle finger.)

The more risky the session the more likely I am to use 12-exposure rolls of film, which improves the likelihood I will have a roll to send in for developing at the end of my session. (This may not be economical, but the loss of a good photo already taken is a REAL loss).

In the most recent close call, I was taking photos of the ship I work on, tied up at the Bellingham, WA cruise terminal. The winds were gusting to 25 knots. I was hauling in after my last shot, when all three spars on the box part of my 8 ft. Delta Conyne broke. The kite was falling like a snowflake, with my camera falling more like a hailstone. With the camera still more than 100 ft. from my hands, I started pulling in line as fast as possible, afraid of either drowning my camera or smashing it to pieces on the side of the ship.

I guess I was lucky or something, as I stopped at the right time with the camera dangling over a mooring line about 25 ft. from the water. The photo on page 12 was on the roll of film in the camera when this happened.

• æ

peter's flying rubbermaid

by PETER BERRYMAN • 125 Division Street, Madison, WI 53704

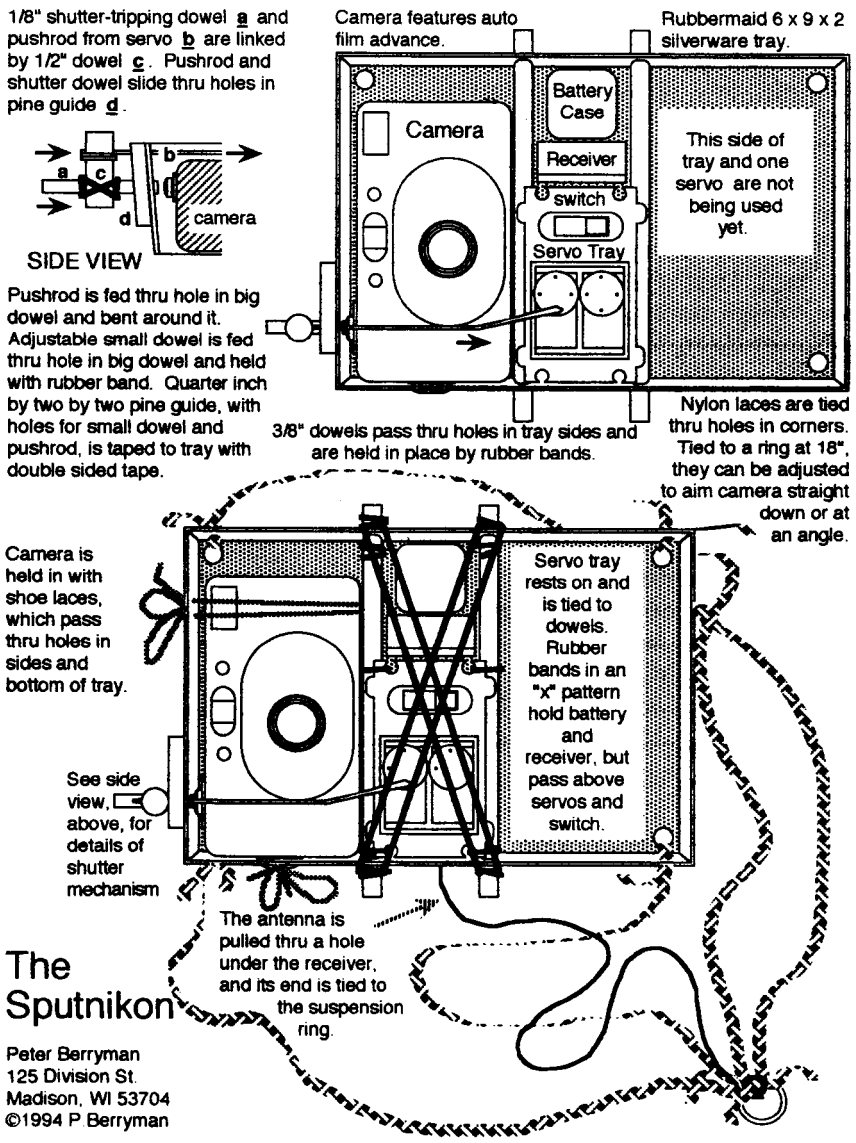

david's ingenious hole saw

by DAVID McCUISTION • 824 W. Second, El Dorado, KS 67042

My first aerial photo was taken in March 1994, using a Polaroid Swinger as a test mule for my recently acquired Futaba four-channel radio control system — the R/C system worked beautifully — the pictures were terrible, blurred almost beyond recognition.

I wrestled with how to control both horizontal and vertical movement, and have developed what I believe to be a unique system. My cradle system, which includes pendulum, cradle frame, radio receiver, and Ricoh SLR weigh approximately three and one half pounds.

Cradle details follow:

1) CAMERA: Ricoh XR-10M 35 mm SLR. This camera is made for aerial photography: screw mount on the bottom and hot-shoe directly above (on top of the camera) allow two secure mounting surfaces; an electrical shutter release; built-in motor drive; automatic exposure control; exposure compensation; uses Pentax lenses; shutter speeds to 1/2000 second.

2) FRAME: 1-1/2" X 1/16" aluminum extrusion cut and bent to the shapes needed. Bearings are machine screws through drilled holes.

3) CONTROL: Horizontal movement (panning) is accomplished with a Futaba S-148 servo pulling a pushrod bent to form a link which engages a hole saw. Vertical movement (up and down) is accomplished with a Futaba S-134 servo connected to the hinged camera via two pushrods.

4) SHUTTER: Exposures are made with a Futaba S-148 servo pulling a pushrod against a momentary push-button electrical switch wired to the camera's electrical cable release.

• æ

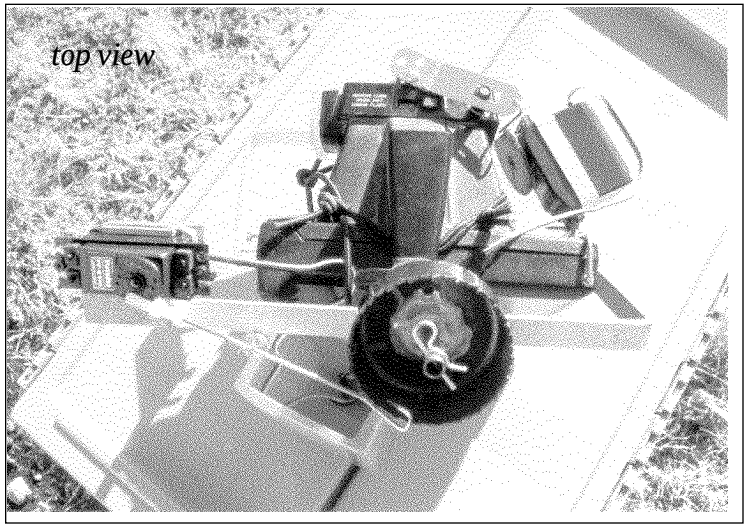

rodney's wooden wonder

by RODNEY THOMSEN• 3656 Old Arcata Rd., #25, Eureka, CA 95503

I have two motorized camera rigs that are radio-controlled, both using two servos. On the rig shown, one servo trips the shutter and the other pans the camera through 45 degrees either side of center. The weight of this rig as pictured is 455 grams (16 oz).

While most camera cradles used in aerial photography are constructed of aluminum, I choose to build mine of wood for several very good reasons. It's light in weight, easily worked and readily available. I use knot-free pine shelving and rip it to a thickness of about 3/16" and to appropriate width on my table saw. This thickness seems to give enough strength for the present day 35mm point-and-shoot cameras, most of which weigh about eight ounces or less.

To assemble the frame I use Elmer's® carpenter's glue and 20 ga. half inch brads, forced in with pliers. Corners are reinforced with small triangles of 1/16" aircraft p1ywood fastened in the same manner.

One way that I save weight is to use AAA batteries rather than AA. Since four-cell AAA battery cases are not commonly available, I make mine by cementing together back-to-back two of Radio Shack's #270-398 double cases, and solder the wires in series to give 6 volts.

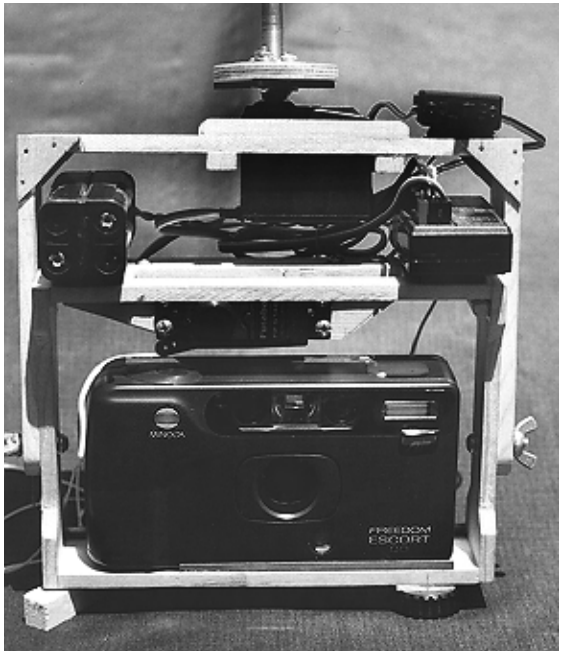

Sticky-back Velcro® is the material I use to affix the battery pack, receiver and power switch to the frame.

If you are skeptical as to the merits of wood as a material for a kite-lofted camera rig, consider that thousands of model airplanes have survived countless takeoffs and landings using the same basic material and construction techniques. The key to survival is, DON'T crash your rig!

• æ

aerial gallery

These pictures were taken with the rigs shown in this issue. Clockwise from left:

- *M.V. Matanuska, Bellingham, WA, by Henry Jebe.*
- *Rail yards & fish docks, Eureka, CA, by Rodney Thomsen.*

* *Kansas Farm by David McCuistion*

* *Rocks & Surf Asilomar State Beach, CA, by Brooks Leffler*

steve's double-drogue cradle

by STEVE EISENHAUER, 229 Lake Avenue, Pitman, NJ 08071

My new cradle has three servos and two drogues. One micro-servo operates the shutter, one servo allows 120 degrees vertical aim (look down, look up) and one servo allows 360 degrees horizontal aim (look around). The two drogues stabilize the cradle and compensate for "blow away" (the tendency for the wind to push the pendulum-hung camera downwind). My current camera is a Minolta 2xi SLR.

The cradle is similar to other three-servo systems except the pendulum tube used in most systems is replaced by two aluminum strips. These strips have two teflon washers at the pivot to dampen twisting movement and allow tension adjustment of pendulum swing. Above the pivot the strips have been shaped into loops, and drogues have been epoxied around these loops.

These drogues are designed to help keep the camera level to the horizon; wind resistance above the pivot (drogues) counteracts resistance below the pivot (camera). On days when the wind is steady, this system works well: about 75 percent of my pictures are level with the horizon. On gusty days, my kite and cradle constantly change elevation: gravity effects and the heavier weight of the camera overwhelm the stabilizing effect of the drogues. Sudden movement of the pivot point swings the camera away from level; consequently, on gusty days a lower percentage of pictures are level.

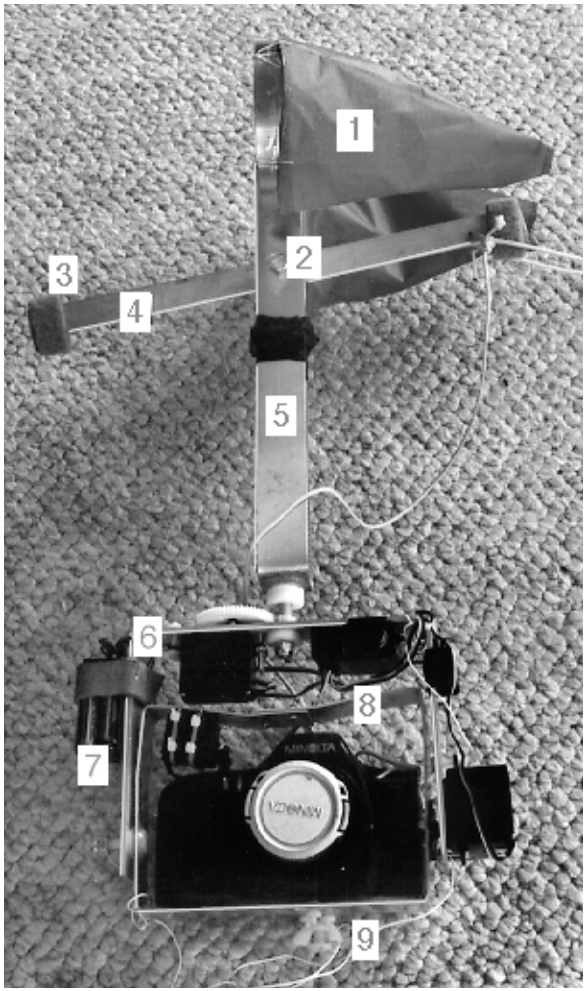

This cradle is a prototype. Although the 4" drogues help stabilize and keep the cradle level, they don't create enough resistance to completely equalize the resistance of the camera. 6" drogues mounted further above the pivot point are probably necessary to more accurately equalize resistance. I'll probably have to mount a tiny level on the cradle and suspend the cradle in front of a powerful fan, or I'll have to take it outside on a very windy day. I can then alter the size, shape, length and/or position of the drogues, or raise and lower the position of the camera, to better equalize wind resistance.

Although I feel this new cradle is a big improvement from my last cradle (with only one servo to actuate the shutter), I have a gnawing feeling that a "Picavet" system (utilizing a line and pulley suspension) is better. I hope I'm wrong; I'm already attached to my "double-drogue" cradle and like to think I'm only a few refinements away from my ultimate cradle.

1. Drogues - Made from ripstop nylon or other light material. Epoxied around aluminum loops. Can be of various shapes and lengths but cannot be so long they droop into the camera's view. Both drogues must be of exactly same size and shape, and must be positioned at same height above pivot point; cradle will wobble if drogues are poorly balanced.

Wind resistance of drogues should counteract resistance of camera and radio control rig mounted below the pivot. If your camera is mounted one foot below the pivot, and the drogues are centered six inches above, then the drogues' wind resistance must be twice that of the camera rig (estimating drogue wind resistance involves compensating for the leverage created by different distances to the pivot). If you have access to a wind tunnel just turn the wind speed up to 40 MPH and keep adjusting the wind resistances until the cradle hangs vertically at both 40 and 0 MPH.

2. Pivot - Use teflon or (second choice) nylon washers. By adjusting the nylon lock nut on the pivot you can adjust the dampening action. The teflon washers slide freely against smooth aluminum; just don't crank the nut down too tightly. On gusty days this pivot swing damper can knock the peaks off any pendulum swings if the nut is adjusted properly.

3. Hangers - Use Velcro® strips because they're easy to attach and disconnect. Buy self-sticking Velcro and attach the self-sticking sides of two strips back-to-back. One side should be the "hook" strip, the other side the "hooked" strip. Glue a hook strip of Velcro at each end of the aluminum bar that is attached to the kite line. Wrap each Velcro strip over the line, the bar and back over itself: 1" square of Velcro supports about 2 lbs.; if you wrap it back over itself you probably increase the strength to about 10 lbs. per strip.

• *continued on next page*

Always attach a safety line to a swivel or ring on the kite line, and attach this line seperately to the camera and the cradle.

4. Top aluminum strip - Use aluminum 1/8" by 3/4" by 8". Drill 1/4" hole in center of strip and sand and polish it smooth so the teflon washers move freely.

5. Vertical aluminum strips - Use aluminum 1/16" by 1". Bend one long strip in a vise so a 1" square is at bottom. Drill a 1/4" hole in bottom square, and install a 1/4" steel bolt and washer in this hole. A 12-tooth plastic sprocket is epoxied to the bolt shaft where it mates with the sling. A stop must be located just below the pivot to prevent the kite line from wrapping around the camera and cradle when the kite flies directly overhead. Stop should be located so the line just barely touches the camera frame when the kite is flying vertically.

6. Sling - Use aluminum 1/8" by 1"; drill 1/4" hole in center. Mount battery pack and R/C junction box on top or side of sling. Bolt one servo on vertical arm of sling for direct-drive “look up, look down” control. (To balance the cradle tape a miniature level under your camera, suspend the cradle on a line and keep repositioning the battery pack until the camera is level shooting in all directions.) Bolt another servo under horizontal sling bar and put a 48-tooth sprocket on the servo drive.

7. Battery pack - Use 4 AAA ni-cad batteries, 4 AAA rechargeable alkaline, or perhaps 4 new AA lithium batteries. Lithium batteries are about 40% lighter than ni-cads or alkalines, so AA lithiums are about the same weight as AAA ni-cads. Lithium batteries also

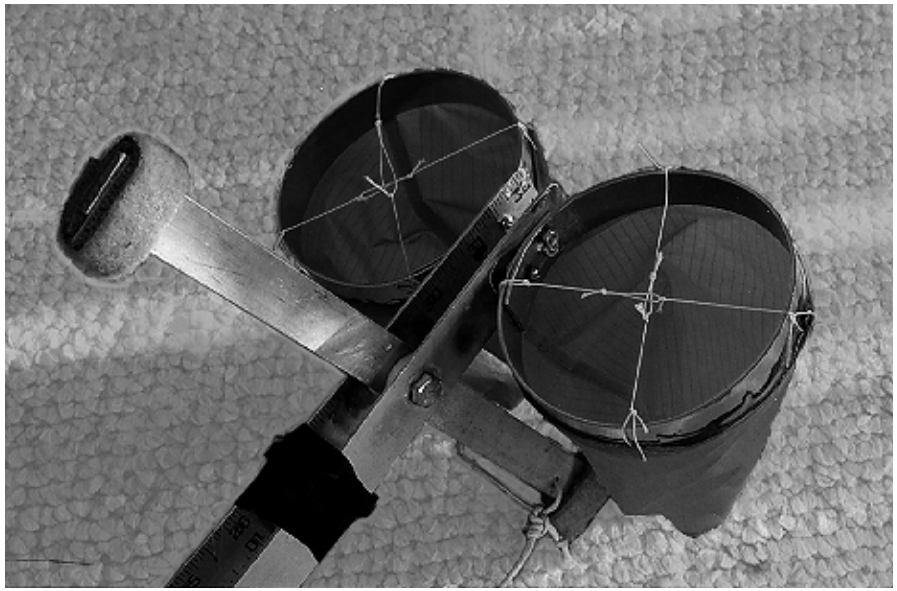

Lake Lenape—Mays Landing, NJ, by Steve Eisenhauer

have more power at low temperatures, and last much longer than non-rechargeable alkalines. One problem with lithium batteries is they can't be recharged, so if you leave the switch on by mistake you have to buy new batteries.

8. Camera frame - Use aluminum 1/16" by 1". Bend in vise and use two tiny bolts to join together. Bolt to servo on one side, and use plastic 1/4" bolt on other for pivoting. Use Velcro on bottom of frame, and glue matching Velcro to bottom of camera body. Put 1/4" hole in bottom of frame to screw camera to frame. You'll probably have to make a tiny "T" bracket so your camera sets far enough back on frame to be properly balanced. An improperly balanced camera will make your "look up, look down" servo work too hard (or it may not work at all). Use micro-servo bolted to top frame bar to actuate shutter.

9. Antenna - My antenna is the wire supplied with the R/C receiver wrapped once around the bolt connecting the camera to the frame. It hangs loosely in two loops. It nevers gets in the way of the picture, and although it doesn't look very professional, it works well.

• æ

Aerial Photography Workshop
COME & COMPARE NOTES!

Saturday, October 15, 1994
9:00 am - 11:45 am

AKA Convention
Wildwood, NJ

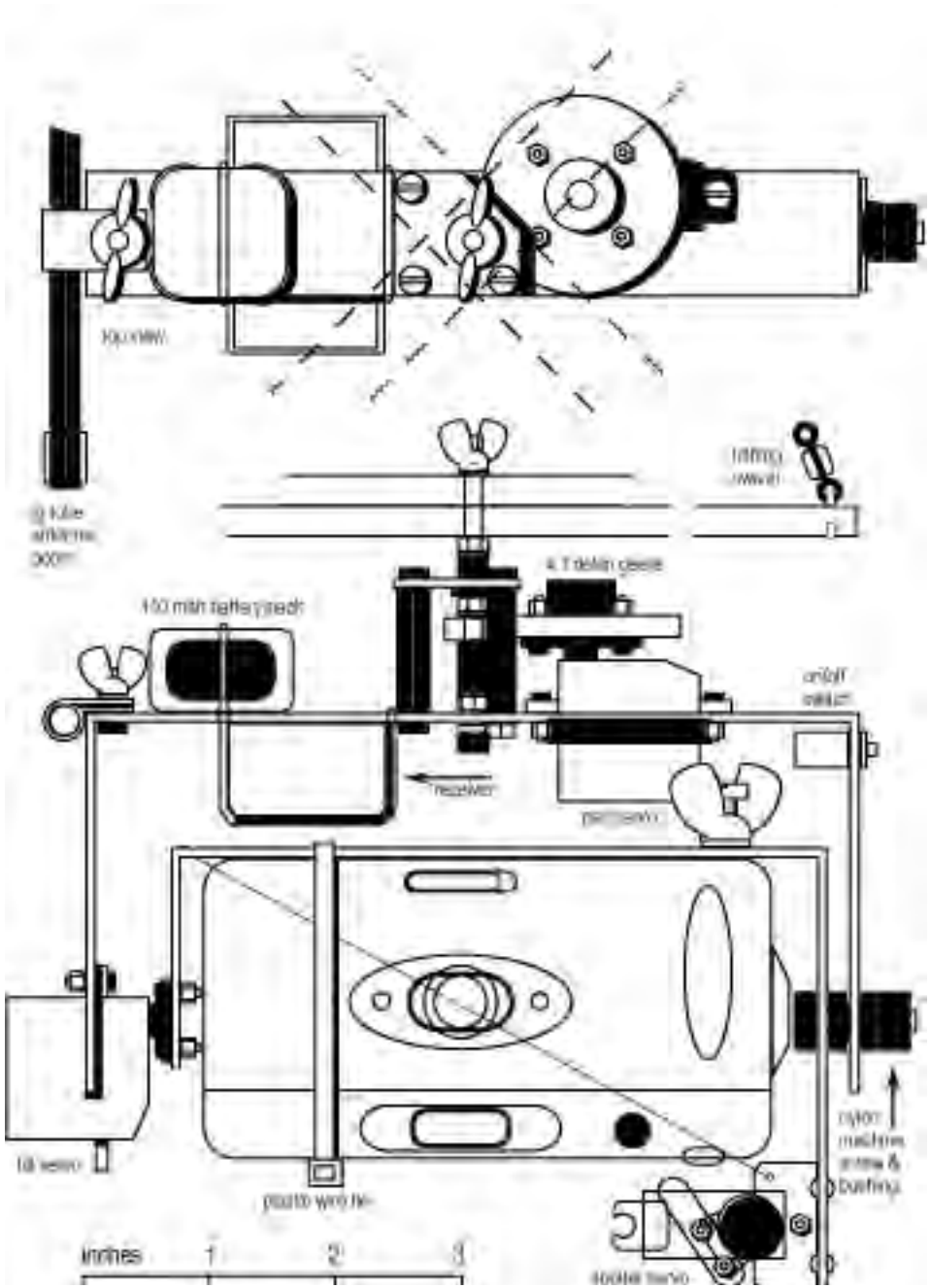

brooxes better brownie box, mark VI

by BROOKS LEFFLER • PO Box 34, Pacific Grove, CA 93950-0034

This is my sixth iteration of a camera rig. The evolution may be worth recounting; each rig has given me good pictures.

I started in 1988 with a commercial Greens mount ($60) somewhat modified by me to take a 2-channel radio control (shutter, tilt) ($50 - $80). I used that one for several years with pretty good results. It carried a Nikon One-Touch camera (excellent optics, used $60) and weighed about 3.5 pounds.

In March 1992, for a workshop, I designed a plywood kit cradle around a cardboard throwaway cameras ($6 - $10). The shutter was triggered by a de-thermalizing timer for a model airplane ($22). Plans for this cradle were published in the July 1993 issue of Kiting. (Reprints available.)

My third cradle was built around a weatherproof Pentax Zoom 90WR. It used two channels once again, but this time for pan (horizontal) & tilt (vertical), leaving the shutter to the camera's built-in intervalometer. Following uncertain directions in KAPWA News, I modified the pan servo to turn 360 degrees. I found it difficult to tweak the servo to keep it from creeping, and the camera was much too heavy for direct drive by a fast servo. The flywheel effect would keep the camera whipping around well past where I wanted to stop, which also stressed the rig. I abandoned this one after about three rolls.

Then I tried another 2-channel rig using a motor to rotate the camera. The motor kicked up so much servo interference I gave up on this one too.

Finally I bit the bullet and sprung for a 4-channel Futaba Attack-4 radio ($120 - $150 with 3 servos). My fifth rig used the same Nikon camera, but this time I installed the pan servo with a 2-stage belt drive, using tiny timing belts and plastic pulleys. This was a more successful arrangement, weighing about 2.5 pounds ready to fly.

Which brings us to Mark VI, the cradle shown here. My goal was lightness without sacrificing control. The auto-everything Minolta Freedom Vista ($70 on sale) weighs just 7.1 ounces (206 grams) ready to go. It is limited to fake panorama format through a masked 24 mm lens; there are only two choices of film speed as well: ISO 100 or 400.

The frame is 1/16" hardware-store aluminum strap, 3/4" wide under the camera and 1" elsewhere. I used a chassis nibbler from Radio Shack for the rectangular cutouts. Except for the 8/32 brass main pivot, all hardware is either nylon (machine screws, nuts, bushings and spacers), 1/8" pop rivets, or 2/56 brass machine screws with aircraft locknuts. I gave up on timing belts for panning this rig, using 4:1 Delrin® gears instead, which have been entirely satisfactory.

• *continued next page*

randy's stealth rig

by RANDY BOLLINGER • 249 Gladys, Ferguson, MO 63135

In May of 1994 I came home to find a message on my answering machine from Michael Fuller, a Ph.D. professor of Anthropology.

He informed me he was in need of two basic kite photo rigs to take along to the Middle East. He didn't need radio control; they were not permitted to use it in Syria where it is considered spy stuff. Also, kites with spars can't be used, as radar will pick them up and a communications attempt will be made. If the kite will not answer, anti-aircraft rockets will be fired, and you will be imprisoned.

Therefore, the professor and his Co-Director use parafoils and a Samsung camera with an interval shutter, and keep the rig below rocket strikes. I asked the professor to drop Michel Dusariez a postcard. I will later try and get copies of his works in Syria and Egypt for the newsletter.

The plans opposite are for the type mount I made for the professor. I will make these to order for those who don't want to build their own.

I will also send plans next time for mounting and using a micro-video camera with a still camera. • æ

---

brooxes • *from page 19*

All servos are the micro size for r/c gliders ($27 - $35 each), providing 80% of the torque of a standard servo with only 40% of the weight. My battery pack, I believe, is an innovation for KAP: it is a 110 mAh 4-cell NiCd rechargeable ($9), weighing just 1 ounce (30 g), compared to 3.38 oz. (96 g) for standard 500 mAh NiCd AAs. The smaller capacity has not proven to be a limitation. A 10 mAh low-flow charger is necessary, though — the 500 mAh one that comes with most radio packages will fry these batteries in a hurry.

The cradle is suspended by the uncanny self-leveling 1912-vintage Picavet design, consisting of a horizontal X hanging by a long continuous line from two points A-B on the flying line . *[NOTE: The diagram originally used to illustrate the Picavet suspension didn't reproduce in Acrobat. See Picavet in later issues. —bgl 2001]* After fretting about what hi-tech material to use for the X, I ended up with basswood: light and stiff. But I made it too slender for rough use, got careless, and had to jury-rig an inelegant replacement of aluminum. Nonetheless, the whole system weighs in at just over a pound — 460 grams!

• æ

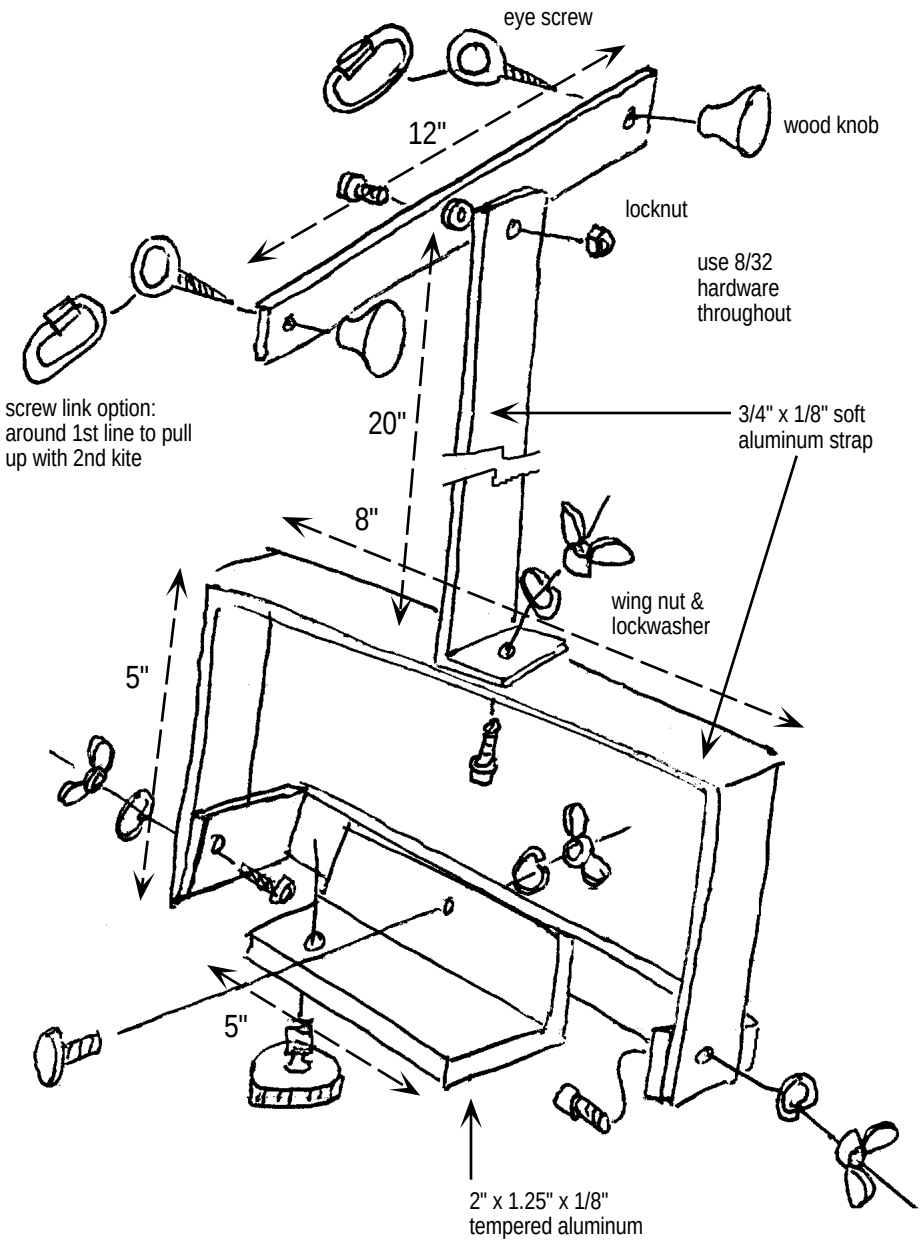

THE RIGS OF ROCK. Above is Anne's super ultralight, weighing a mere 11 ounces. Below is Steve's later design, made of honeycomb composite used for aircraft floorboards. With Canon Rebel ready to go, it tips the scale at just over 2 lbs.

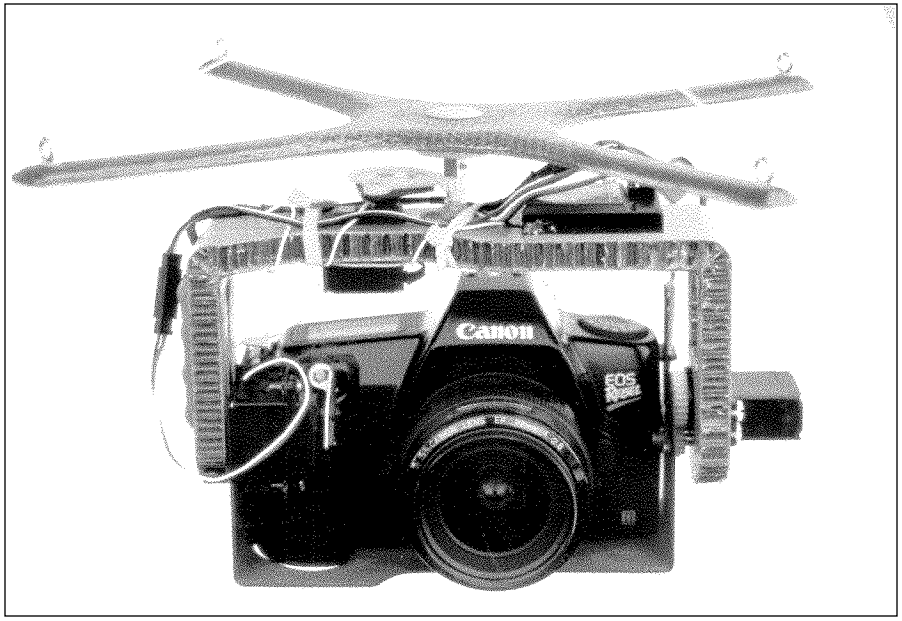

high-tech and light as a … rock

by ANNE ROCK • 2420 Ninth Street, Berkeley, CA 94710

Steve Rock, spouse, occasional ground crew, etc., makes the equipment. He has been working with composites for over 20 years, first as a canoe and kayak builder and now as an aircraft mechanic specializing in composite repair.

We both are amused by the homage many people pay to high-tech materials such as graphite or "even" fiberglass, as high-tech isn't necessarily better for every application. My equipment is made with high-tech materials because that's what Steve is most comfortable working with, and it amuses him. So the point I make about what material to use for a cradle is: use what you are most comfortable working with.

The composites do not make a significantly lighter or more rigid rig — nor do they magically make me a better aerial photographer — doing counts for more than equipment.

I currently have two rigs, one r/c and one very simple cradle. The simple setup is my second rig (the first, r/c, has been sold) and I have come to enjoy kite aerial photography much more with it (the first system weighed 3.5 - 4 pounds, and flying it was stressful).

The camera is a Rollei Prego AF which has an intervalometer that can be set to take a picture every minute or 10 minutes or 30 minutes. 35mm lens, 1/500th sec shutter speed. There's a Samsung camera with identical specs, the one difference being a higher-quality lens on the Rollei.

The rig is always flown with a Picavet suspension. The cradle is made with a graphite skin on either side of a structural foam core, epoxy resin, vacuum-bagged. There are reinforcements where the tilt adjust and suspension fasteners go through the laminate. The camera attaches to the cradle with adhesive-backed Velcro® on the bottom and on one side. For additional security, I usually put a short length of line through the neck strap slot on the camera and tie it around the cradle.

Total weight of camera, film, cradle, Picavet is around 11 ounces.

When the rig is on the ground, I set the direction the camera points and the tilt. The light weight is a joy, but there are times when I really miss the flexibility of r/c! I compensate by slowly letting line out/pulling camera in and by walking around with the kite and camera whenever possible to get as varied a set of pictures as possible.

A number of people have looked at this system and been encouraged to try kite aerial photography ... mostly it's the intervalometer which attracts them, as it provides a method for taking multiple pictures without getting into r/c or having to haul the camera down repeatedly.

The other rig is a typical r/c (rotation, tilt, shutter release). The upper part of-

the cradle is made from a honeycomb material used for floorboards in airplanes. The inner skin and some honeycomb were removed to make the bends; there are little graphite corner pieces reinforcing the bends. The depth of the material allows some of the equipment to be partially recessed. The bottom half is graphite.

The camera is attached in 3 places: tripod screw, and through the two neck strap attachment points (as you look at the camera front, on the back right side there's a tallish gizmo sticking up, and that's one of the attachments; the other is back left, a metal hook).

The servo for the shutter release is mounted to a bracket on the bottom half — you can see the arm/button but not the servo. Steve would have preferred mounting the servo directly to the camera, but the only place available was the LCD on top and I vetoed that. The rig has 3 micro servos (Futaba S-133) and a slightly lighter battery pack. The power switch has been eliminated: the battery cable is plugged directly into the receiver. Cutouts were made in the bottom half for camera battery and film replacement. A cotter pin secures the rotation shaft; the tilt bolts go into crimped nut plates.

The camera was purchased just before I heard about the new Canon, which has an 11 oz body, compared to the 14 oz on the Rebel II ... oh well. Total weight of this rig (camera with lens, UV filter, lens shade, film, Picavet) is 33 oz. I've only flown this rig a couple of times, but so far am enjoying the reduction in weight from the previous r/c system (mostly due to new camera and lens). • æ

BELOW: Farms near Taastrup, Denmark, by Anne Rock. Rollei Prego, Fuji 400.